POWER LEGEND

- DUPLEX OUTLET 15 AMP
- QUAD OUTLET
- WP — DUPLEX OUTLET WEATHERPROOF
- CLG. — DUPLEX OUTLET CEILING MOUNTED
- F — DUPLEX OUTLET FLOOR MOUNTED
- E/V/D F — ELECTRIC/VIDEO/DATA OUTLET - FLOOR MOUNTED
- GFI — DUPLEX OUTLET GROUND FAULT INT.
- 42" — OUTLET MOUNTED @ 42" AFF.
- SPECIAL OUTLET 220 VOLT
- SMOKE DETECTOR
- JUNCTION BOX CONNECTION
- ELECTRICAL PANELBOARD

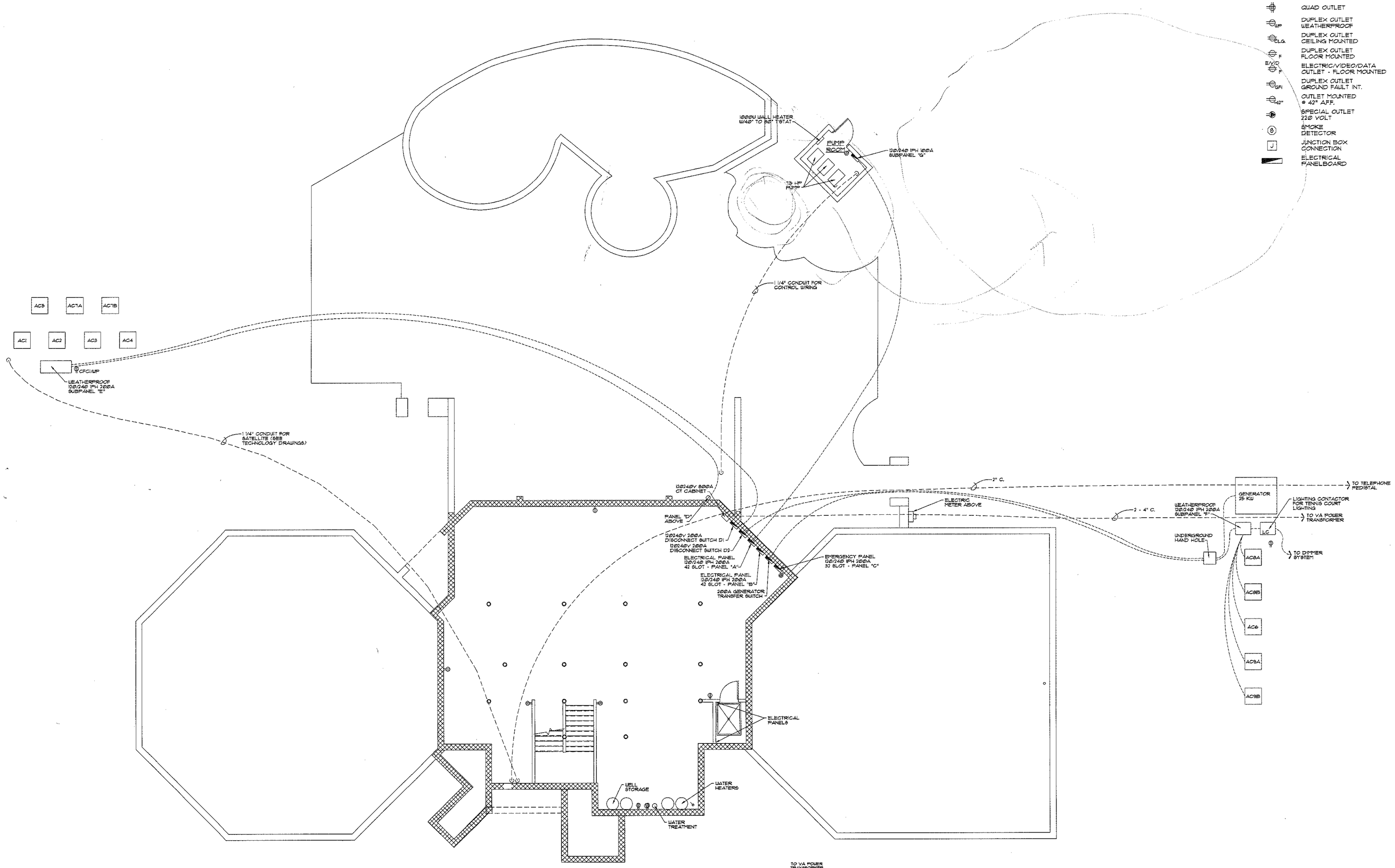

BASEMENT POWER PLAN

SCALE: 3/16" = 1'-0"

0' 2' 4' 10' 20'

7,000 S.F. FINISHED

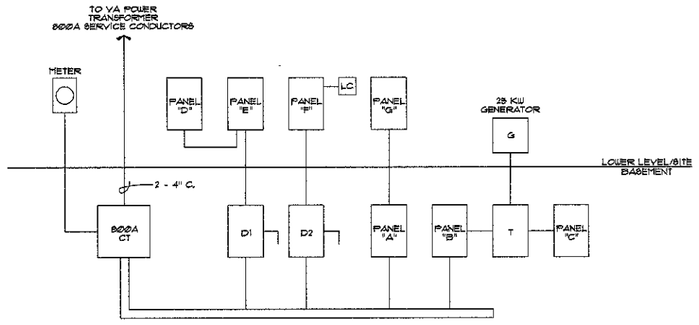

SINGLE LINE POWER DIAGRAM

PANEL SCHEDULE

PANEL NO.	DESCRIPTION	LOCATION	COMMENTS
A	120/240 1PH, 42 SLOT 200AMP PANEL	BASEMENT	
B	120/240 1PH, 42 SLOT 200AMP PANEL	BASEMENT	
C	120/240 1PH,42 SLOT 200AMP PANEL	BASEMENT	EMERGENCY LOADS
D	120/240 1PH, 24 SLOT 125AMP PANEL	FILTER ROOM	
E	120/240 1PH, 24 SLOT 200AMP PANEL - SOUTH	SOUTH AC UNIT	NEMA 3 ENCLOSURE
F	120/240 1PH, 24 SLOT 200AMP PANEL - NORTH	NORTH AC UNIT	NEMA 3 ENCLOSURE
G	120/240 1PH, 24 SLOT 125AMP PANEL	PUMP ROOM	
T	120/240 200AMP TRANSFER SWITCH	BASEMENT	
LC	LIGHT CONTACTOR FOR TENNIS COURT LIGHTS	NEAR NORTH AC UNIT	
D1	120/240 200AMP DISCONNECT	BASEMENT	
D2	120/240 200AMP DISCONNECT	BASEMENT	

I certify that these documents were prepared or approved by me, and that I am duly licensed architect under the laws of the commonwealth of Virginia.
License no.
Expiration date
© This drawing is the property of Architect Michael L. Oxman and associates ltd. and shall not be used on this project only. Any other use is strictly prohibited.

3263 Charlottesville Pike
Nellysford, Va. 22958
Phone: (540) 361-2445
Fax: (540) 663-3000
email: Mlo@oxmanltd.com
Web: www.oxmanltd.com

07-02-2020
04-21-2020

90% REVIEW SET
FOR CONSTRUCTION

CHATEAU DE ESLE
1401 Greystone, Fauquier County, VA

200051

F-10

architect michael l. oxman and associates ltd.