SPLIT SYSTEM HEAT PUMP AIR HANDLING UNITS W/ BACKUP PROPANE HEAT

DESIG.	SERVICE	NOMINAL TONNAGE (TONS)	FAN DATA CFM	FAN DATA E.S.P. "H2O	FAN DATA HP	COOLING CAP. (MBH) SEN.	COOLING CAP. (MBH) TOTAL	HEATING CAP. (MBH) 47°F AMB.	HEATING CAP. (MBH) 17°F AMB.	SUPPLEMENTAL HEATER PROPANE CAPACITY IN / OUT (BTUH)	INDOOR ELEC. DATA V/Ø	INDOOR ELEC. DATA FLA	OUTDOOR ELEC. DATA V/Ø	OUTDOOR ELEC. DATA MCA	BASIS OF DESIGN INDOOR	BASIS OF DESIGN OUTDOOR	NOTES
AC-1	BEDROOM #2	2	700	0.5	1/5	17.1	24.6	24.0	15.2	40,000 / 37,000	120/1	4.9	230/1	19.7	CARRIER 58MXA024	CARRIER 38YXA024	1, 3, 5, 6, 7, 8
AC-2	BEDROOM #3	2	700	0.5	1/5	17.1	24.6	24.0	15.2	40,000 / 37,000	120/1	4.9	230/1	19.7	CARRIER 58MXA024	CARRIER 38YXA024	1, 3, 5, 6, 7, 8
AC-3	BEDROOM #4	2	700	0.5	1/5	17.1	24.6	24.0	15.2	40,000 / 37,000	120/1	4.9	230/1	19.7	CARRIER 58MXA024	CARRIER 38YXA024	1, 3, 5, 6, 7, 8
AC-4	BEDROOM #5	2	700	0.5	1/5	17.1	24.6	24.0	15.2	40,000 / 37,000	120/1	4.9	230/1	19.7	CARRIER 58MXA024	CARRIER 38YXA024	1, 3, 5, 6, 7, 8
AC-5	REC ROOM	4	1,500	0.5	1/2	34.4	45.8	47.0	27.4	60,000 / 55,000	120/1	7.9	230/1	27.0	CARRIER 58MXA048	CARRIER 38YXA048	1, 3, 5, 6, 7, 8
AC-6	EXERCISE RM, LAUNDRY	3	1,200	0.5	1/3	26.5	35.3	28.6	17.1	40,000 / 37,000	120/1	5.8	230/1	25.2	CARRIER 58MXA036	CARRIER 38YXA036	1, 3, 5, 6, 7, 8
AC-7	GREAT ROOM	8 TOTAL	3,000 TOTAL	0.8	3/4	70.7	93	N/A	N/A	120,000 / 110,000	120/1	7.9	230/1	27.0	CARRIER 58MXA048	CARRIER 38TXA048	1, 2, 4, 5, 6, 7, 8
					3/4						120/1	7.9	230/1	27.0	CARRIER 58MXA048	CARRIER 38TXA048	
AC-8	LOGGIA, VESTIBULE	8 TOTAL	3,000 TOTAL	0.8	3/4	70.7	93	N/A	N/A	120,000 / 110,000	120/1	7.9	230/1	27.0	CARRIER 58MXA048	CARRIER 38TXA048	1, 2, 4, 5, 6, 7, 8
					3/4						120/1	7.9	230/1	27.0	CARRIER 58MXA048	CARRIER 38TXA048	
AC-9	MASTER BEDROOM, BATH	8 TOTAL	3,000 TOTAL	0.8	3/4	70.7	93	N/A	N/A	120,000 / 110,000	120/1	7.9	230/1	27.0	CARRIER 58MXA048	CARRIER 38TXA048	1, 2, 4, 5, 6, 7, 8
					3/4						120/1	7.9	230/1	27.0	CARRIER 58MXA048	CARRIER 38TXA048	

NOTES:

1. PROVIDE INDOORS UNITS WITH CERTIFIED A.G.A. GAS CONVERSION KIT FOR PROPANE USE.
2. 8-TON UNITS ARE ACTUALLY TWO (2) 4-TON UNITS "TWINNED" TOGETHER IN ACCORDANCE WITH MANUFACTURER'S RECOMMENDATIONS. INVOLVES PLACING THE TWO UNITS SIDE-BY-SIDE, AND CREATING COMMON RETURN AND SUPPLY CONNECTION.
3. PROVIDE SYSTEM WITH DUAL-FUEL THERMOSTAT WITH OUTSIDE AIR SENSOR CAPABLE OF SWITCHING FROM HEAT PUMP HEATING TO AUXILIARY HEATING AUTOMATICALLY DEPENDING ON OUTSIDE AIR CUTOFF SETPOINT (40°F). CARRIER TSTATCCPDF01.
4. PROVIDE SYSTEM WITH STANDARD PROGRAMMABLE THERMOSTAT CAPABLE OF SWITCHING FROM COOLING TO PROPANE HEATING, AND CAPABLE OF CONTROLLING MASTER AND SLAVE "TWINNED" FURNACES.
5. PROVIDE SYSTEM WITH HARD SHUTOFF TXV, COMPRESSOR START ASSIST CAPACITOR AND RELAY FOR EXTENDED RUNS, CRANKCASE HEATER AT COMPRESSOR, TIME DELAY RELAY, LIQUID LINE SOLENOID, AND HI AND LOW PRESSURE SWITCHES. "TWINNED" FURNACES TO HAVE FIELD SUPPLIED RELAY FOR LEAD/LAG ALTERNATION OF MASTER AND SLAVE FURNACES.
6. ALL REFRIGERANT CIRCUITS TO USE PURON (R-410A).
7. ALL INDOOR UNITS SHALL BE PROVIDED WITH AN APPROPRIATE DX COIL MATCHING THE SIZE OF THE INDOOR UNIT BLOWER. BASIS OF DESIGN: CARRIER CDSA.
8. ALL INDOOR AC UNITS SHALL HAVE 3/4" COMBINED COOLING COIL AND GAS FURNACE CONDENSATE ROUTED TO NEAREST OPEN SITE DRAIN (IN BASEMENT AND AC UNIT CLOSETS). SEE PLUMBING DRAWINGS.

CEILING / SIDEWALL REGISTER SCHEDULE

CFM RANGE	SIZE	BASIS OF DESIGN
0-50	6x4 (U.O.N.)	*
51-100	8x4 (U.O.N.)	*
101-150	10x4 (U.O.N.)	*
151-200	8x6 (U.O.N.)	*
201-300	12x6 (U.O.N.)	*

*NOTE: SIDEWALL AND CEILING REGISTERS SHALL BE ALUMINUM CONSTRUCTION SIMILAR TO METAL AIRE MODEL V910. RETURN AIR REGISTERS SHALL BE ALUMINUM CONSTRUCTION SIMILAR TO METAL AIRE MODEL H4002BD.

CEILING REGISTERS OR GRILLES TO BE PROVIDED WITH CEILING DAMPERS SHALL BE PROVIDED WITH DAMPER THAT MAINTAINS RATING OF CEILING AND IS CONSTRUCTED AND TESTED IN ACCORDANCE WITH UL STANDARD 555. BASIS OF DESIGN: NAILOR SERIES 0700 (ROUND AND RECTANGULAR RADIATION DAMPER)

COMBINATION FAN/HEATER/LIGHT SCHEDULE

DESIG.	SERVICE	DESCRIPTION	CFM	E.S.P. "H2O	ELEC. DATA V/Ø	HP OR WATTS	ACCESSORIES	BASIS OF DESIGN
EF-A	BATHROOM EXHAUST	C, DD, IL, TC	70	0.1	120/1	1,620 W (1)	D, WC W/ IBD	NUTONE 9965
-	-	-	-	-	-	-	-	-

ABBREVIATIONS

AF	AIR FOIL	IL	IN LINE	TC	THERMOSTATICALLY CONTROLLED
BD	BELT DRIVE	MB	MOUNTING BASE	THD	TOP HORIZONTAL DISCHARGE
BG	BELT GUARD	MD	MOTORIZED DAMPER	UB	UP BLAST DISCHARGE
BS	BIRD SCREEN	OG	OUTLET WIRE GUARD	US	UTILITY SET
C	CENTRIFUGAL	OS	OUTLET SHUTTER	VI	VIBRATION ISOLATORS
CE	CENTRIFUGAL EXHAUSTER	P	PROPELLER	WC	WALL CAP
CM	CEILING MOUNTED	PC	PREFABRICATED CURB	WP	WEATHERPROOF ENCLOSURE
D	DISCONNECT SWITCH	PRV	POWER ROOF VENTILATOR	WS	WALL-SWITCH CONTROLLED
DD	DIRECT DRIVE	SA	SUPPLY AIR		
GD	GRAVITY DAMPER	SC	SPEED CONTROL		
IBD	INTEGRAL BACKDRAFT DAMPER	TA	TUBE AXIAL		
IG	INLET WIRE GUARD				

NOTES:

(1) INCLUDES BUILT-IN 1500 WATT FORCED AIR HEATER, 100 WATT LIGHT, 7 WATT NIGHTLIGHT

MECHANICAL SYMBOLS LIST

- NEW RECTANGULAR DUCT (18 x 12)
- NEW ROUND DUCT (12"Ø)
- EXISTING RECTANGULAR DUCT
- DUCT TO BE DEMOLISHED
- DUCTWORK WITH 1" ACOUSTICAL SOUND LINING
- DUCTWORK WITH 2-HOUR FIRE RATED ENCLOSURE
- DUCT RISING UP
- DUCT DROPPING DOWN
- SUPPLY DUCT
- RETURN DUCT
- EXHAUST DUCT
- TURNING VANES
- FLEXIBLE CONNECTION
- FIRE DAMPER
- MOTORIZED DAMPER
- COMBINATION MOTORIZED SMOKE/FIRE DAMPER
- VOLUME DAMPER
- SCREENED OPENING
- NEW FLEX DUCT
- NEW ROUND RIGID DUCT
- 24" x 24" P.P.R.G.
- 24" x 24" P.P.C.D.
- THERMOSTAT
- ELECTRIC RADIATION ENCLOSURE / HEATING ELEMENT
- NEW COOLING ONLY TERMINAL
- RELOCATED COOLING ONLY TERMINAL
- EXISTING COOLING ONLY TERMINAL
- NEW FAN POWERED TERMINAL
- RELOCATED FAN POWERED TERMINAL
- EXISTING FAN POWERED TERMINAL
- NEW PERIMETER DIFFUSER
- RELOCATED PERIMETER DIFFUSER
- EXISTING PERIMETER DIFFUSER
- LINEAR SLOT DIFFUSER WITH PLENUM W/ 1" SOUND LINING
  - (8-34-B-W-B4)
  - SHEETMETAL WIDTH x HEIGHT
  - CAPACITY CFM PER LINEAR FOOT
  - THROW DIRECTION 1=ONE WAY, 2=TWO WAY, D=DOWNBLAST
  - SLOT SIZE: A=1/2", B=3/4", C=1"
  - NUMBER OF SLOTS
  - LINEAR FEET OF ACTIVE SECTION
- DOOR UNDER CUT (SEE ARCH) — UC
- DOOR LOUVER (SEE ARCH.) — DL
- DIRECTION OF FLOW
- PITCH IN DIRECTION SHOWN
- PIPE TURNING DOWN
- PIPE TURNING UP
- TOP TAKE OFF
- BOTTOM TAKE OFF
- GATE VALVE
- BALL VALVE
- GLOBE VALVE
- CHECK VALVE
- DEZURIK SHUT-OFF AND BALANCING VALVE
- UNION
- FLEXIBLE COUPLING
- STRAINER
- TWO WAY CONTROL VALVE
- BUTTERFLY VALVE
- THREE WAY CONTROL VALVE
- FLOW SWITCH
- PRESSURE GAUGE
- CONDENSER WATER SUPPLY — CWS
- CONDENSER WATER RETURN — CWR
- COIL CONDENSATE DRAIN — D
- FUEL OIL SUPPLY — FOS
- FUEL OIL RETURN — FOR
- FUEL OIL FILL — FOF
- FUEL OIL GAUGE — FOG
- FUEL OIL VENT — FOV
- FIRE — F
- GAS — G
- REFRIGERANT SUCTION — RS
- REFRIGERANT LIQUID — RL
- REFRIGERANT RELIEF — RR
- NEW TO EXISTING
- LIMIT OF DEMOLITION

RISER DESIGNATIONS (OA / 1)

OA OUTSIDE AIR
CW CONDENSER WATER
EA GENERAL EXHAUST AIR
WE WET STACK EXHAUST
KE KITCHEN EXHAUST
DE DISHWASHER EXHAUST
D CONDENSATE DRAIN
SP STAIR PRESSURIZATION
SCS SMOKE CONTROL SYSTEM
FPS FIRE PRESSURIZATION SYSTEM

(1) SHEET NOTE TAG

EQUIPMENT DESIGNATIONS (F-)

F - FAN
P - PUMP
UH - UNIT HEATER
CH - CABINET HEATER
WH - WALL HEATER
DH - DUCT HEATER
AC - AIR CONDITIONING UNIT
AHU- AIR HANDLING UNIT
CU - CONDENSING UNIT
RTU- ROOF TOP UNIT
TW - THRU THE WALL UNIT
CT - COOLING TOWER
HE - HEAT EXCHANGER

(4 - 6.5) HEATING CAPACITY (KW); HEATING ELEMENT LENGTH (FT)

DESIGNATION

(C / 600) VAV TERMINAL TAG; CFM

(A / M-3) SECTION MARKER — SHEET WHERE SECTION IS SHOWN

(1 / M-3) DETAIL MARKER — SHEET WHERE DETAIL IS SHOWN

MECHANICAL GENERAL NOTES

1. THE FOLLOWING NOTES ARE GENERAL IN NATURE AND PERTAIN TO THE ENTIRE PROJECT. WHERE THERE ARE EXCEPTIONS, ADDITIONS, OR REVISIONS TO THESE NOTES, SUCH EXCEPTIONS, ADDITIONS, OR REVISIONS ARE SO NOTED ON THE PARTICULAR DRAWING WHERE THEY OCCUR.
2. CONTRACTOR SHALL CLOSELY EXAMINE PLUMBING AND STRUCTURAL DRAWINGS TO AVOID DUCT AND PIPING INTERFERENCE WITH STRUCTURAL BEAMS, COLUMNS, AND OTHER SIMILAR OBSTRUCTIONS.
3. ALL DUCTWORK SIZES SHOWN ARE SHEET METAL SIZES.
4. ALL DUCTWORK AND PIPING SHALL RUN AS HIGH AS POSSIBLE AND AVOID FINISHED CEILINGS UNLESS OTHERWISE NOTED.
5. ALL OUTSIDE AIR LOUVERS (INTAKE, EXHAUST, OR RELIEF) SHALL BE FITTED WITH 1/2 INCH MESH BIRD SCREENS MOUNTED BEHIND LOUVERS. ALL UNUSED PORTIONS OF OUTSIDE AIR LOUVERS (INTAKE, EXHAUST, OR RELIEF) SHALL BE BLANKED OFF AIRTIGHT WITH 22-GAUGE GALVANIZED SHEET METAL AND 2 INCH RIGID INSULATION.
6. TURNING VANES SHALL BE PROVIDED IN ALL 90 DEGREE ELBOWS. LOW PRESSURE DUCTWORK WHICH IS 31 INCHES OR GREATER IN WIDTH SHALL BE PROVIDED WITH DOUBLE THICKNESS TURNING VANES. FOR DUCTWORK BETWEEN 13 AND 30 INCHES IN WIDTH, TURNING VANES MAY BE SINGLE THICKNESS. DUCTWORK WHICH IS LESS THAN 12 INCHES IN WIDTH SHALL BE PROVIDED WITH RADIUS ELBOWS IN LIEU OF MITERED ELBOWS WITH TURNING VANES.
7. ALL DUCTWORK SHALL CONNECT TO EQUIPMENT WITH FLEXIBLE CONNECTIONS.
8. WHERE INSULATED DUCTS PENETRATE WALLS, THE INSULATION SHALL CONTINUE UNINTERRUPTED THROUGH THE WALL PENETRATIONS.
9. ALL SUPPLY AIR DUCTWORK SHALL BE INSULATED WITH MINIMUM 1 1/2" FIBERGLASS BATT INSULATION WITH VAPOR BARRIER EXCEPT WHEN PROVIDED WITH 1 INCH OR MORE OF SOUND LINING.
10. THE MECHANICAL SYSTEM SHALL CONFORM IN ALL RESPECTS TO THE APPLICABLE EDITION OF THE ICC CODES AND ALL OTHER CODES CURRENTLY IN EFFECT IN FAUQUIER COUNTY, VA.
11. EXCEPT FOR CONTROL VALVES, ALL VALVES AND PIPING ACCESSORIES SHALL BE LINE SIZE.
12. ALL EQUIPMENT WITH ROTATING PARTS SHALL BE PROVIDED WITH SPRING ISOLATORS.
13. CONTRACTOR SHALL COORDINATE EXACT LOCATION OF DIFFUSERS, REGISTERS, AND GRILLES WITH ARCHITECTURAL DOCUMENTS.
14. WHERE AIR DISTRIBUTION SYSTEMS HAVE VOLUME DAMPERS, SPLITTER DAMPERS, ETC., LOCATED ABOVE OR BEHIND DRYWALL CEILING OR ENCLOSURES, SYSTEM SHALL BE BALANCED PRIOR TO CLOSE-IN.
15. ALL REFRIGERANT RELIEF DEVICES OR FUSIBLE PLUGS ON ALL SYSTEMS SHALL DISCHARGE TO THE OUTSIDE OF THE BUILDING IN ACCORDANCE WITH LOCAL CODES.
16. ALL REFRIGERANT PIPING SHALL BE SIZED AND INSTALLED IN ACCORDANCE WITH UNIT MANUFACTURER'S RECOMMENDATIONS.
17. MOTORIZED DAMPERS THAT ARE INTERLOCKED WITH FANS OR OTHER EQUIPMENT SHALL OPEN PRIOR TO START-UP OF ASSOCIATED FANS OR EQUIPMENT.
18. ALL SUPPLY, EXHAUST AND RETURN DUCTWORK SHALL BE OF ALUMINUM CONSTRUCTION. ALL DUCTWORK SHALL HAVE ALL SEAMS AND JOINTS SEALED WATER-TIGHT.

ABBREVIATIONS

ABV.	ABOVE	L.D.	LINEAR DIFFUSER
A/C	AIR CONDITIONING	L.F.	LINEAR FOOT
ADJ	ADJUSTABLE	MAX.	MAXIMUM
A.F.F.	ABOVE FINISHED FLOOR	MIN	MINIMUM
ARCH.	ARCHITECTURAL	M.O.D.	MOTOR OPERATED DAMPER
@	AT	N.C.	NORMALLY IN CLOSED POSITION
B.D.	BACK DRAFT DAMPER (GRAVITY)	NK	NECK
		N.O.	NORMALLY IN OPEN POSITION
BLDG.	BUILDING	O.A.	OUTSIDE AIR
BLW	BELOW	P.P.C.D.	PERFORATED PANEL CEILING DIFFUSER
B.S.	BIRD SCREEN	P.P.R.G.	PERFORATED PANEL RETURN GRILLE
CAP.	CAPACITY	P.P.R.R.	PERFORATED PANEL RETURN REGISTER
CAV	CONSTANT AIR VOLUME	P.P.T.D.	PERFORATED PANEL TRANSFER GRILLE (REGISTER UPSTREAM-GRILLE DOWN)
C.D.	CEILING DIFFUSER		
CFM	CUBIC FEET PER MINUTE	R.A.	RETURN AIR
C.G.	CEILING GRILLE	R.G.	RETURN GRILLE
CLG.	CEILING	RM.	ROOM
CONN.	CONNECTION	R.R.	RETURN REGISTER
CONT.	CONTINUATION	S.A.	SUPPLY AIR
C.R.	CEILING REGISTER	S.C.S.	SMOKE CONTROL SYSTEM
DN.	DOWN	S.F.D.	COMBINATION SMOKE/FIRE DAMPER
D.	CONDENSATE DRAIN	SHT	SHEET
DTL.	DETAIL	S.L.	ACOUSTICAL SOUND LINING
DWG. NO.	DRAWING NUMBER	S.O.	SCREENED OPENING
EA.	EACH	SPEC.	PROJECT SPECIFICATIONS
E.A.	EXHAUST AIR	S.R.	SUPPLY REGISTER
E.G.	EXHAUST GRILLE	S.R.O.	SCREENED RETURN OPENING
E.R.	EXHAUST REGISTER	STAT.	THERMOSTAT
E.S.P.	EXTERNAL STATIC PRESSURE	STRUCT.	STRUCTURAL
		T.G.	TRANSFER GRILLE (REGISTER UPSTREAM-GRILLE DOWN)
EXH	EXHAUST		
EXIST.	EXISTING	TRAN.	TRANSITION
F.D.	FIRE DAMPER	TYP.	TYPICAL
FL	FLOOR	U.H.	UNIT HEATER
FLEX	FLEXIBLE	VAV	VARIABLE AIR VOLUME
F.P.S.	FIRE PRESSURIZATION SYSTEM	V.D.	MANUAL VOLUME DAMPER
GA.	GAUGE	VERT.	VERTICAL
HC	HEATING COIL (DUCT)	W/	WITH
HP	HORSEPOWER		

NOTE: THE ABOVE SYMBOLS AND ABBREVIATION ARE STANDARD AND MAY NOT ALL APPEAR ON THE CONTRACT DRAWING.

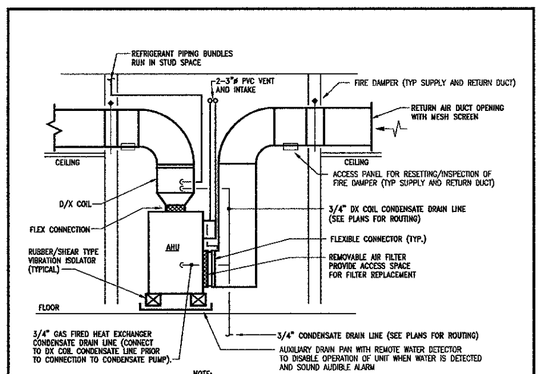

3 / M-003 AIR HANDLING UNIT TIE-IN – DETAIL
SCALE : NONE

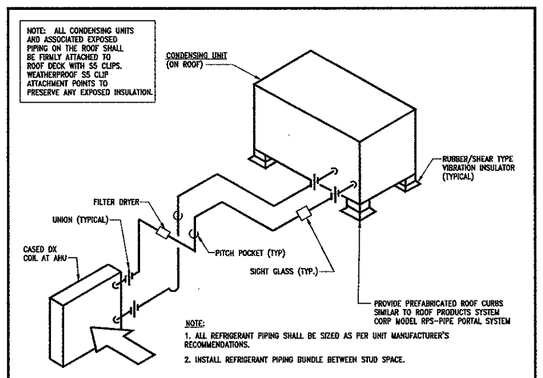

5 / M-003 REFRIGERANT PIPING DETAIL
SCALE : NONE

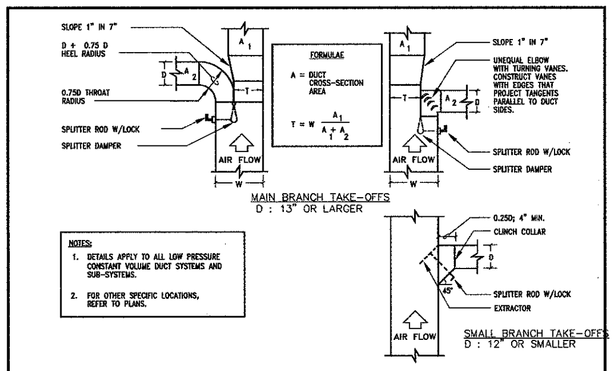

4 / M-003 TYPICAL CONSTANT AIR VOLUME SYSTEM (2" PRESSURE CLASS & LESS) DUCT TAKE-OFFS
SCALE: NONE

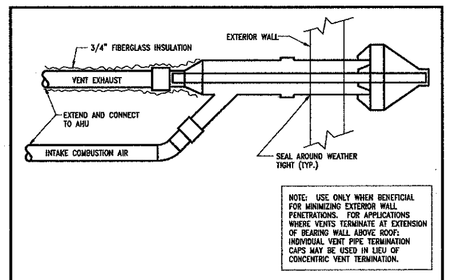

6 / M-003 CONCENTRIC VENT DETAIL
SCALE : NONE

PROJECT MANAGER	
–	
DESIGNERS	
MECHANICAL	CNL
ELECTRICAL	–
PLUMBING	–

GHT LIMITED
CONSULTING ENGINEERS
1010 N. Glebe Road, Suite 200
Arlington, VA 22201 - 4749
PH 703 243-1200
FX 703 276-1376
ght@ghtltd.com
www.ghtltd.com

CONSTRUCTION SET #1 07/13/2004
CONSTRUCTION SET #2 09/07/2004
CONSTRUCTION SET #3 10/13/2004

I certify that these documents were prepared or approved by me, or under my direct supervision and that I am a duly licensed architect under the laws of the state of Virginia. License no. ©
These drawings to be prepared by qualified licensed professionals. Client and subsidiary LLC of is intended for sole use on this project only. Any other use is strictly prohibited.

oxman and associates ltd.
architect michael l. oxman
36363 charnissay pike
phone (540) 668-7449
fax (540) 668-9000
email: mlloxmanltd@aol.com
web: www.architect-oxmancom

EASLEY RESIDENCE
1401 Greystone, Fauquier County, VA

2000151
M-0.1

Z:\Easley Residence 2000151\2000151 CD's - Construction Set #3\2000151 GHT Mechanical 10-04-2004\2000151 M-0.1 M-COVER NEW.dwg, 10/13/2004 2:35:31 PM, Plotter.pc3