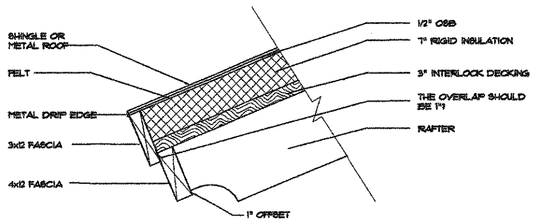

ROOF DETAIL "A"

SCALE: 1" = 1'-0"

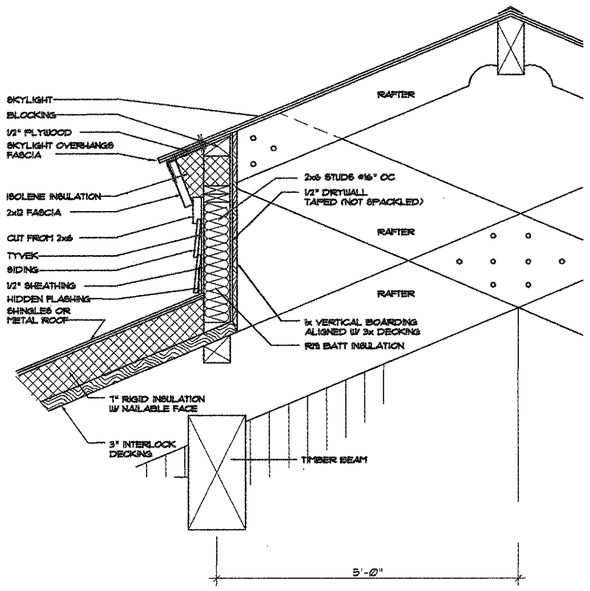

ROOF DETAIL "C"

SCALE: 1" = 1'-0"

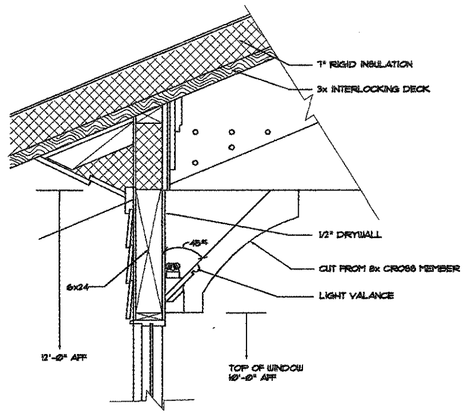

ROOF DETAIL "D"

SCALE: 1" = 1'-0"

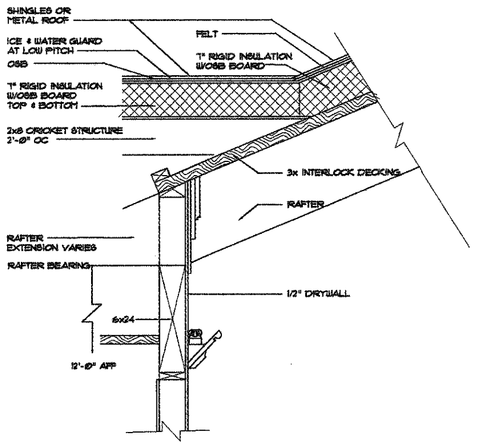

ROOF DETAIL "B"

SCALE: 1" = 1'-0"

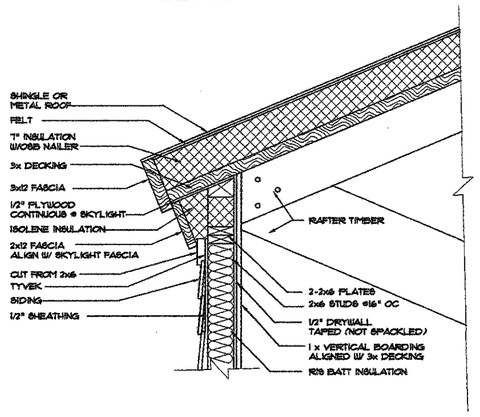

ROOF DETAIL "E"

SCALE: 1" = 1'-0"

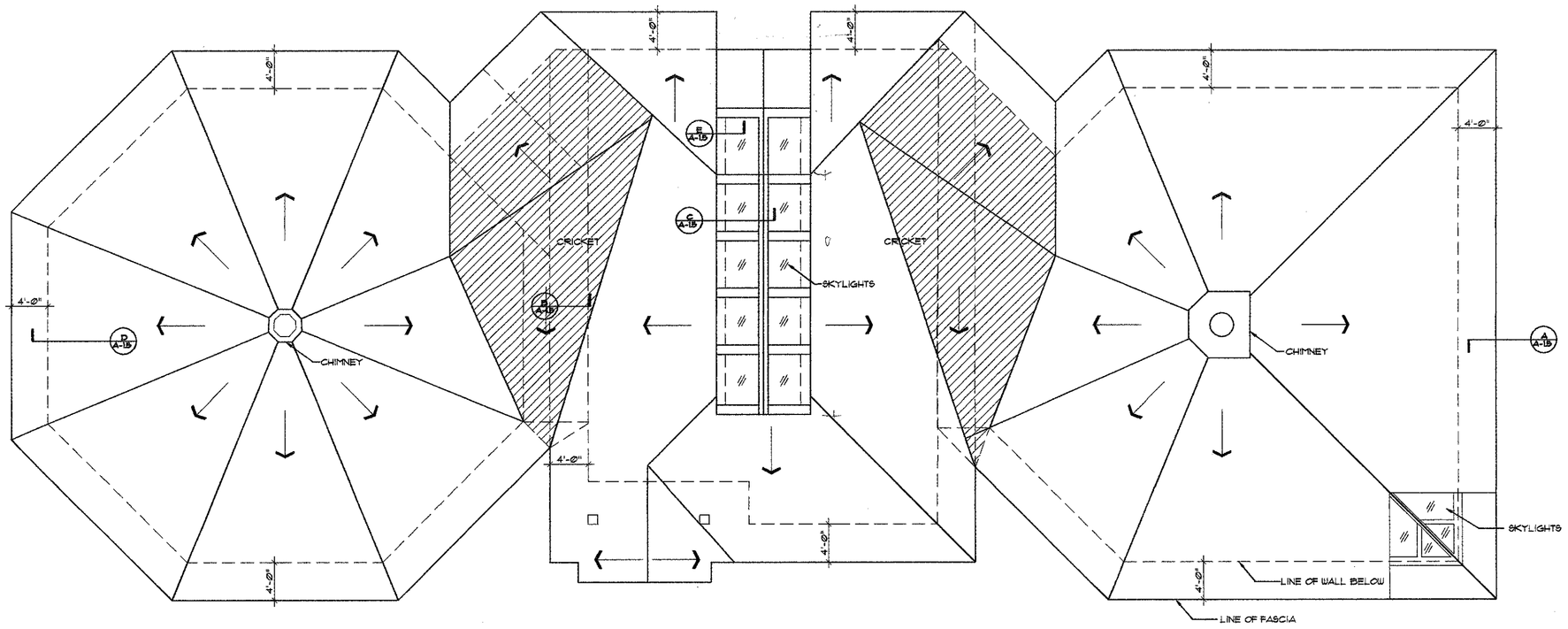

ROOF PLAN

SCALE: 3/16" = 1'-0"

0 2' 4' 10' 20'

N

I certify that these documents were prepared by me, and that I am duly licensed architect under the laws of the state of Virginia.
Reason no.

© This drawing is the property of Architect Michael L. Oxman and Associates, Ltd and is licensed for use. Reproduction, alteration, or other use is strictly prohibited.

Richard Chandler, Project Manager
email: hillcrest018@aol.com
Phone: (540) 668-7445
Fax: (540) 668-7900
web: www.architect-oxman.com

07/23/2004
CONSTRUCTION SET 1
08/17/2004
CONSTRUCTION SET 2
10/12/2004
CONSTRUCTION SET 3

EASLEY RESIDENCE
1401 Greystone, Fauquier County, VA

2000151
A-1.5

architect michael l. oxman and associates ltd.

\\Tmeserver (e)\Drawings\Easley Residence 2000151\2000151 CD's\2000151 A-1.5 Roof Plan.dwg, 11/8/2004 1:52:05 PM, Plotter.pc3