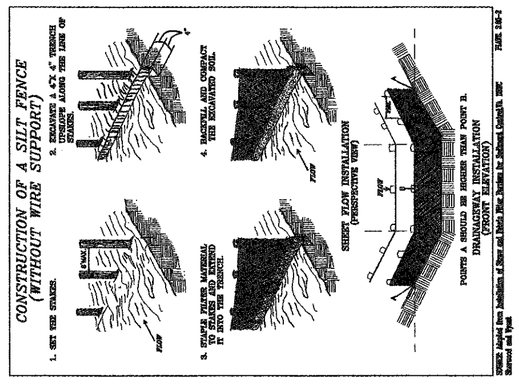

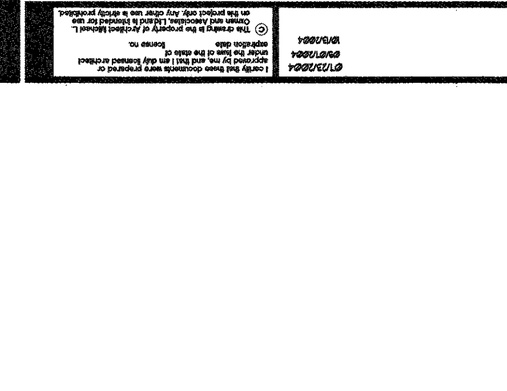

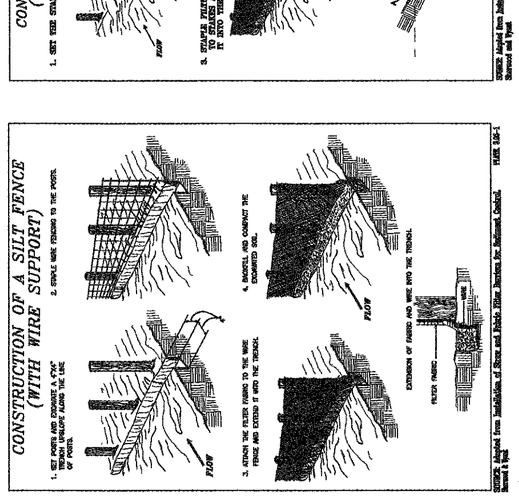

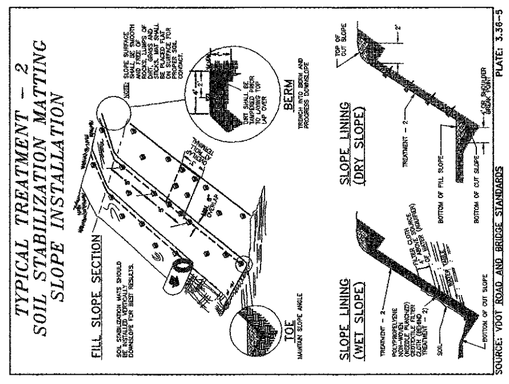

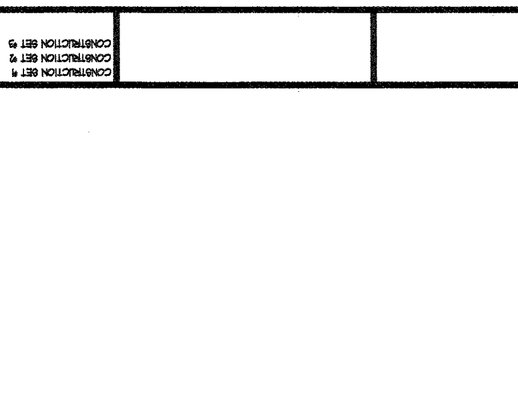

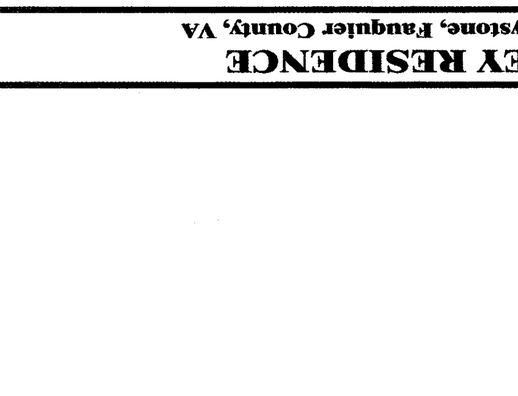

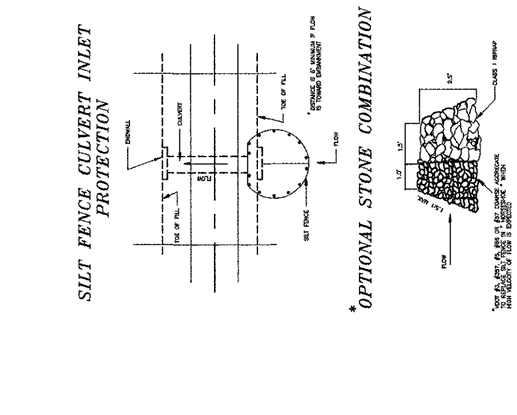

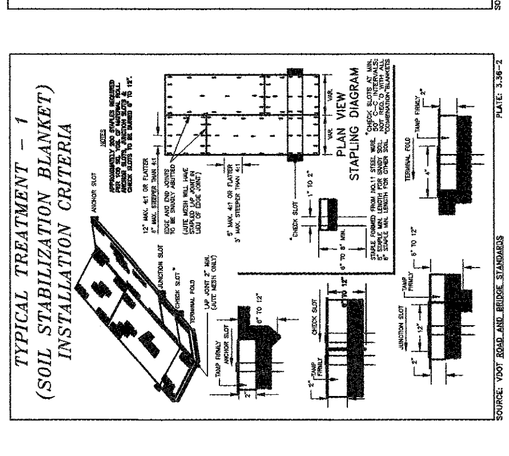

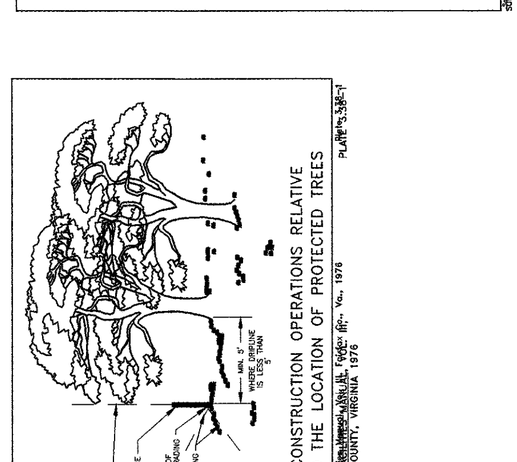

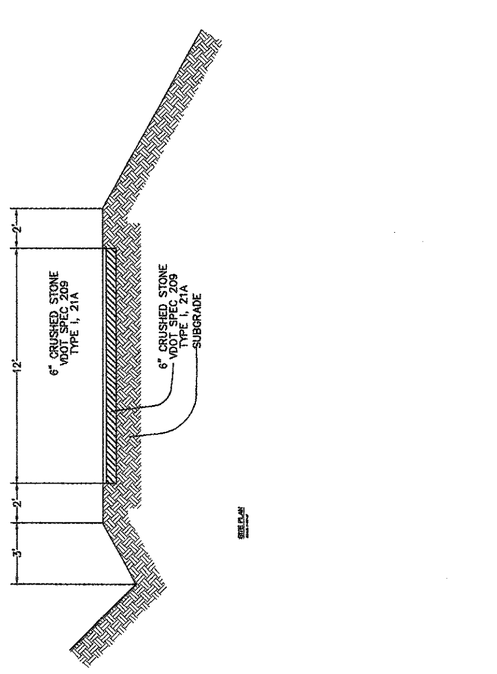

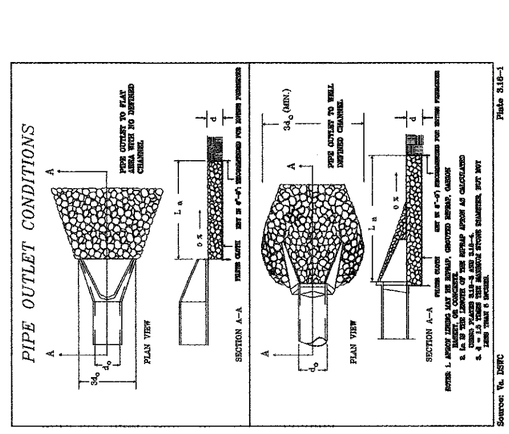

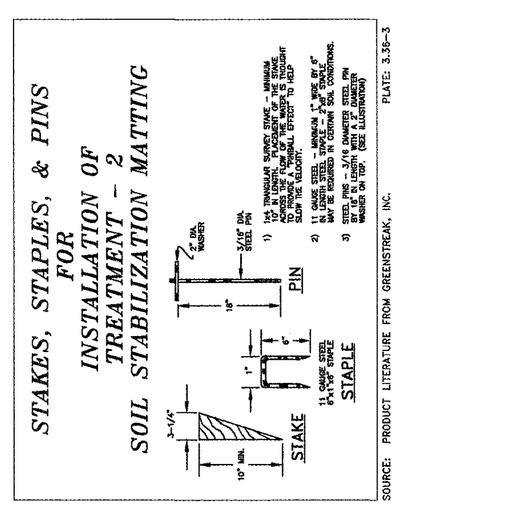

EASLEY RESIDENCE
1401 Greystone, Fauquier County, VA

SP-4

Huntley, Nyce & Associates, Ltd.
SURVEYING - CIVIL ENGINEERING - LAND PLANNING
7500 POTOMAC STREET, UNIT B
PRINCE WILLIAM, VIRGINIA 20000
703-730-3450
40150 STONEHILL TERRACE PARKWAY
SUITE 100
LEESBURG, VIRGINIA 20011
703-729-4148

CONSTRUCTION SET #1	07/23/2004
CONSTRUCTION SET #2	09/07/2004
CONSTRUCTION SET #3	10/01/2004

I certify that these documents were prepared or approved by me, and that I am duly licensed architect under the laws of the state of Virginia. License No.

© This drawing is the property of Architect Michael L. Oxman and Associates, Ltd. and is loaned for use on this project only. Any other use is strictly prohibited.

architect michael l. oxman and associates ltd.
35563 Charlestown Pike
Hillsboro, VA 20132
phone:(540) 668-7445 fax: (540) 668-9000
email: MLOarchitect@aol.com

\\Timeserver (e)\Drawings\Easley Residence 2000151\20001151 CD's\20001151 Site Rearrangement\20001151 SP-4 Site Details Huntley Nyce.dwg, 11/8/2004 5:12:40 PM, plotter.pc3